Obgect Number	Name	QTY
1	CA.04.02.14	1
4	V.TCE5X16	2
5	CA.02.05.005	2
6	R.5.SCH	2
7	R.05.11	1

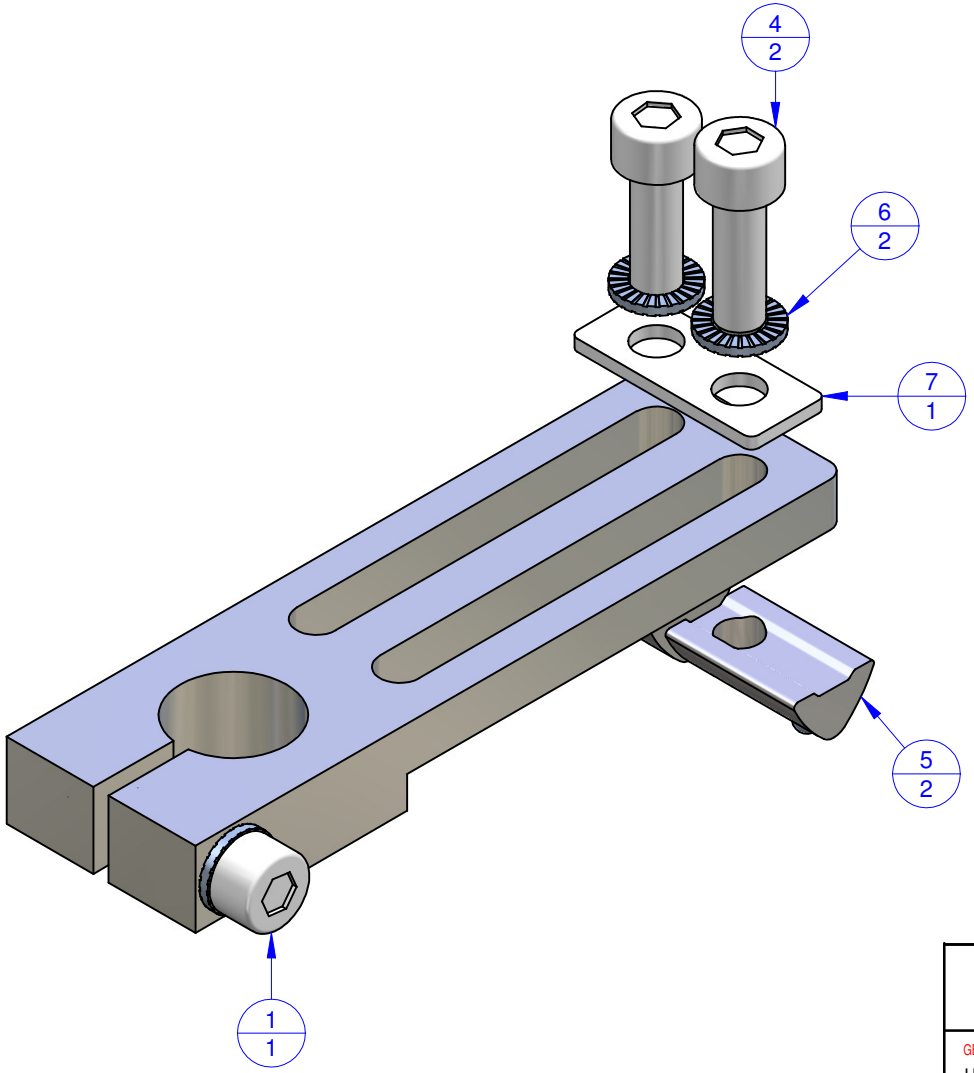

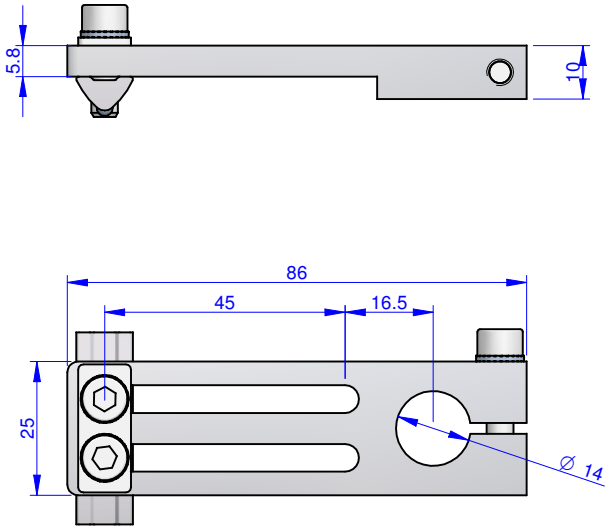

THE PROPERTY OF THIS DRAWING IS ESTABLISHED BY LAW
IT IS FORBIDDEN TO REPRODUCE IT OR SHOW IT TO THIRD PARTY
WITHOUT A WRITTEN AGREEMENT.

MODIFICATIONS: VARIED DIMENSIONS AS OF DATE:
7 8 9 10 11 12

MODIFICATIONS: VARIED DIMENSIONS AS OF DATE:
1 2 3 4 5 6

Format A3
UNI 936-76

FP Services

GENERAL TOLERANCE:
UNI - ISO 2768
CLASSE f

DESCRIPTION

DESIGNED FROM
FPSERVICES

DATE 06/2014

WEIGHT 0,056 kg
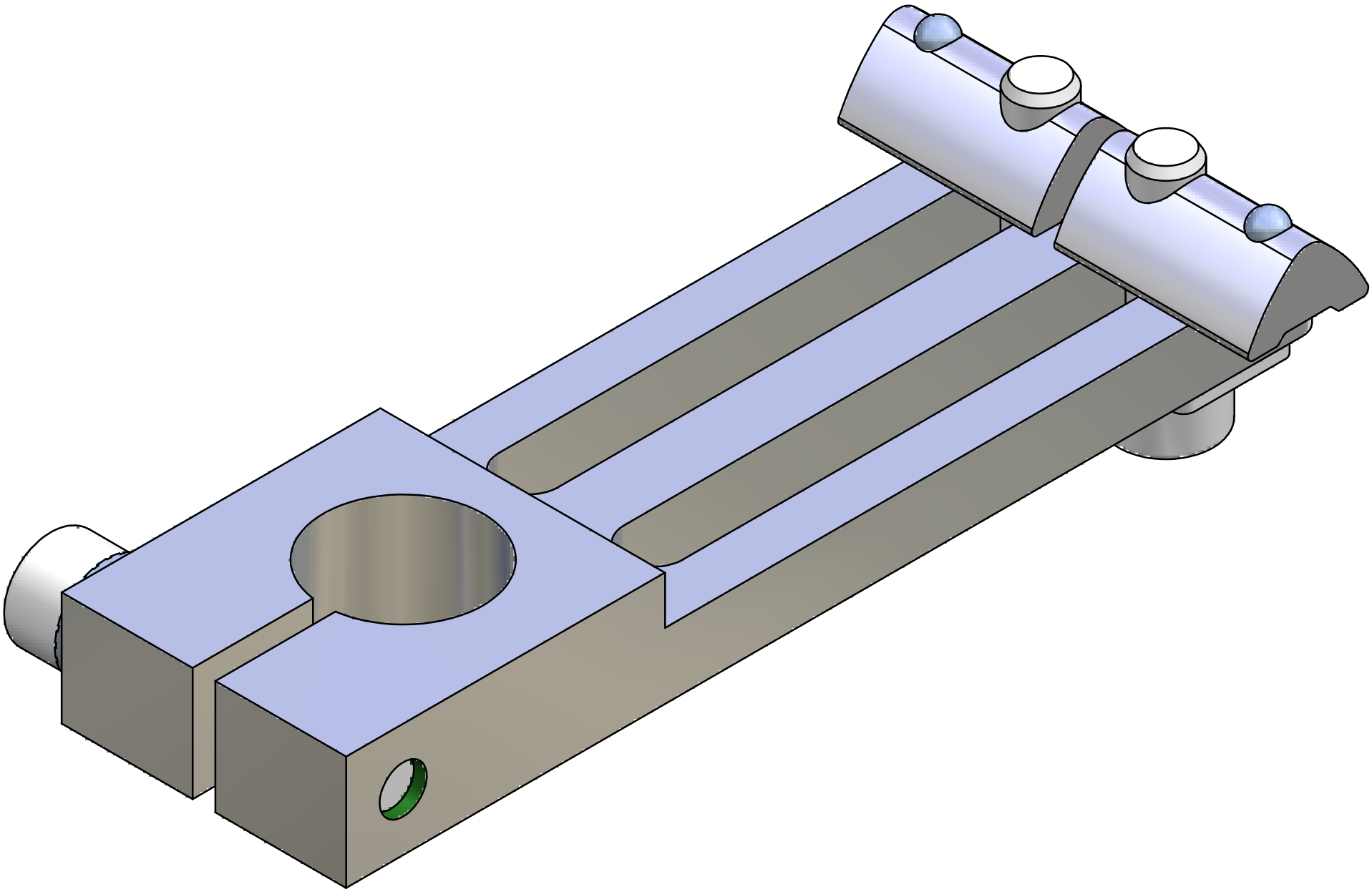
CODE **CA.04.02.14.6**